capsol technologies

Capturing CO_2 and delivering additional high-grade district heating energy to Europe

Cato Christiansen
Chief Technology Officer

September 2023

About this presentation

THIS PRESENTATION IS NOT FOR PUBLICATION NOR DISTRIBUTION, IN WHOLE OR IN PART, DIRECTLY OR INDIRECTLY, IN OR INTO AUSTRALIA, CANADA OR THE UNITED STATES (INCLUDING ITS TERRITORIES AND POSSESSIONS, ANY STATE OF THE UNITED STATED AND THE DISTRICT OF COLUMBIA) OR ANY OTHER JURISDICTION IN WHICH THE RELEASE, PUBLICATION OR DISTRIBUTION WOULD BE UNLAWFUL. THE DISTRIBUTION OF THIS PRESENTATION MAY IN CERTAIN JURISDICTION BE RESTRICTED BY LAW. PERSONS INTO WHOSE POSSESSION THIS RELEASE COME SHOULD INFORM THEMSELVES ABOUT AND OBSERVE ANY SUCH RESTRICTIONS.

This company presentation (the “Presentation”) has been prepared by Capsol Technologies AS (“Capsol” or the “Company”) and relates to Capsol. This Presentation speaks as of August 2023, and there may have been changes in matters which affect the Company subsequent to the date of this Presentation. The Company does not intend, and assumes no obligation, to update or correct any information included in this Presentation. Recipients are advised, however, to inform themselves about any further public disclosures made by the Company.

The Presentation has not been reviewed or registered with, or approved by, any public authority, stock exchange or regulated marketplace. No representation or warranty (whether express or implied) as to the correctness or completeness of the information contained herein is given, and neither the Company nor any of its subsidiaries, directors, officers, employees or advisors assume any liability connected to the Presentation and/or the statements set out herein.

The information included in this Presentation may contain certain forward-looking statements relating to the business, financial performance of and results of the Company and/or the industry in which it operates. Forward-looking statements concern future circumstances and results and other statements that are not historical facts, sometimes identified by the words “believes”, “expects”, “predicts”, “intends”, “projects”, “plans”, “estimates”, “aims”, “foresees”, “anticipates”, “targets”, and similar expressions. The forward-looking statements contained in this Presentation, including assumptions, opinions and views of the Company or cited from third party sources are solely opinions and forecasts which are subject to risks, uncertainties and other factors that may cause actual events to differ materially from any anticipated development. There is no assurance that the assumptions underlying such forward-looking statements are free from errors.

This Presentation is intended to present background information on the Company and its business and is not intended to provide complete disclosure upon which an investment decision could be made. Should the Company choose to pursue an offering of its securities in Norway or elsewhere, any decision to invest in such securities must be made on the basis of information contained in relevant subscription material to be prepared by the Company in connection therewith. The merit and suitability of an investment in the Company should be independently evaluated. Any person considering an investment in the Company is advised to obtain independent legal, tax, accounting, financial, credit and other related advice prior to making an investment.

This Presentation has been prepared for information purposes only. This Presentation does not constitute any solicitation for any offer to purchase or subscribe any securities and is not an offer or invitation to sell or issue securities for sale in any jurisdiction, including the United States. Distribution of the Presentation in or into any jurisdiction where such distribution may be unlawful, is prohibited.

An investment in the Company involves risk, and several factors could cause the actual results, performance or achievements of the Company to be materially different from any future results, performance or achievements that may be expressed or implied by statements and information in this Presentation, including, among others, risks or uncertainties associated with the Company’s business, segments, development, growth management, financing, market acceptance and relations with customers, and, more generally, general economic and business conditions.

This Presentation is directed at persons in member states of the European Economic Area (“EEA”) who are “qualified investors” as defined in Article 2(e) of Regulation (EU) 2017/1129 (“Qualified Investors”). In addition, in the United Kingdom, this Presentation is addressed to and directed only at, “qualified investors” as defined in section 86(7) of the Financial Services and Markets Act 2000 who are also (i) investment professionals falling within Article 19(5) of the Financial Services and Markets Act 2000 (Financial Promotion) Order 2005, as amended (the “Order”); or (ii)high net worth entities falling within Article49(2)(a) to (d) of the Order (all such persons together being referred to as “Relevant Persons”). This Presentation must not be acted on or relied on (i) in the United Kingdom, by persons who are not Relevant Persons, and (ii) in any member state of the EEA other than Norway, by persons who are not Qualified Investors. Any investment or investment activity to which this Presentation relates is available in the United Kingdom only to persons that are both Relevant Persons and Qualified Investors, and in member states of the EEA other than Norway and the United Kingdom only to persons that are Qualified Investors, and will be engaged in only with such persons. This Presentation and the information contained herein is not intended for publication or distribution, directly or indirectly, in whole or in part, in, and does not constitute an offer of securities in, the United States (as defined in Regulation S under the U.S. Securities Act of 1933, as amended (the “Securities Act”)), Canada, Australia, Japan or any other jurisdiction where such distribution or offer is unlawful. The securities of the Company have not been and will not be registered under the Securities Act or with the securities regulatory authority of any state or other jurisdiction of the United States and may not be offered or sold in the United States except pursuant to an exemption from, or in a transaction not subject to, the registration requirements of the Securities Act. By accepting the delivery of this Presentation, the recipient warrants and acknowledges that it is outside the United States. Neither this Presentation nor any copy of it may be taken, transmitted or distributed, directly or indirectly, in whole or in part, into the United States. Any failure to comply with the foregoing restrictions may constitute a violation of U.S. securities laws.

This Presentation is subject to Norwegian law, and any dispute arising in respect of this Presentation is subject to the exclusive jurisdiction of Norwegian courts with Oslo District Court (Oslo tingrett) as exclusive venue. By receiving this Presentation, you accept to be bound by the terms above.

Capsol at a glance

Accelerating the world's transition to a carbon-negative future

- Highly competitive carbon capture technology – safe, flexible and cost-efficient
- Based on potassium carbonate as a solvent and applicable to all CO_2-intensive industries worldwide
- Proven solution with 4 000+ operational hours
- Licensing directly to emitters or through global cooperation and partnerships
- Strong patent protection (11 patent families filed, of which 8 granted)
- Headquarter in Oslo/Norway – office recently opened in Berlin/Germany

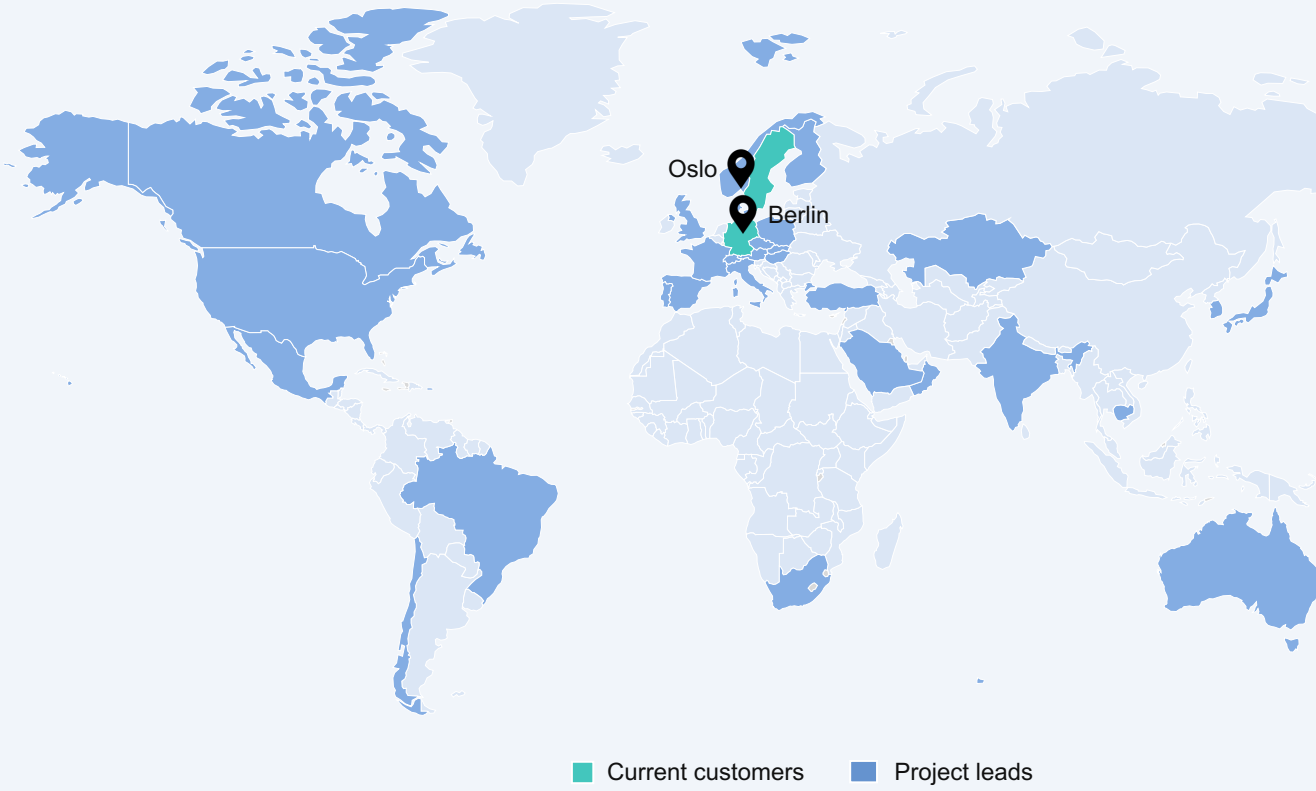

Initiated	Euronext Growth	Invested	Capture plant efficiency	Capture plant uptime
2003	**CAPSL**	**NOK ~500m**	**90-95%**	**>99%**

capsol technologies

Hot Potassium Carbonate – proven carbon capture process

Proven technology in more than 700 plants globally

Applied for CO_2 or H_2S removal in Natural Gas Plants; Vinyl Acetate Monomer (VAM) Plants; Ethylene Oxide (EO) Plants; Methanol Synthesis Plants. Fossil Fuel Power Generation, Incineration Plants, Pulp Mills, Fluid Catalytic Cracking (FCC) Gas, EOR.

Long history, back to the 1950s

Originally developed for CO_2 removal from coal gasification, licensed as the Benfield process.

High energy demand issue solved with CapsolEoP®

With the combination of the internal heat recuperation and steam generation, as well as the utilisation of a turboexpander package, lowest Capture costs are achieved.

Strong HPC experience within team of Capsol Technologies

Building center of excellence for clients around the globe

Capsol Technologies in the CCUS value chain

	Carbon capture technology	EPC[1]	Operations and maintenance	Liquefaction & intermediate storage	Transport	Storage
CO_2 emission/ plant	• Technology licensed out globally directly or through partners (re-sale) • Sales engineering	• Client selects independent provider or via Capsol partnerships • Competitive bidding is important for client to reduce overall cost • Capsol supports client through both the EPC tendering process and actual EPC work	• Client selects independent provider or operates themselves • Capsol offers support and expertise, in addition to optimized technical solutions during lifetime of projects	• Client selects independent provider • Capsol integrate energy waste from liquefaction to reduce energy consumption in the capture plant	• Clients selects independent provider • Capsol can provide independent advice to client	• Client selects independent provider • Capsol can provide independent advice to client

Supporting client through the value chain, but client remains free to choose providers

capsol technologies

[1] Engineering, procurement and construction

Focusing on large industries with high CCS potential together with leading partners

Cement

- Largest industrial emitter
- Hard to abate emissions with few or no other alternatives than CCS

Biomass / Bio-Energy CCS

- Increasing need for carbon removal as the world lags path to net zero
- BECCS is considered the most viable carbon removal option

Gas turbines

- Natural gas expected to be the longest-lasting hydrocarbon-based energy production
- CapsolGT® has the potential to significantly reduce capture cost, increasing the CCS opportunity

Energy-from-Waste

- High potential impact by adding CCS to solution that already reduces emissions
- Strong growth outlook for the EfW industry

- Will expand into other industries
- The company has partnered with industry leaders enabling efficient delivery, cost reductions and increased market share

CATACARB Proven CO_2 Capture Technology

Sumitomo SHI FW

Hitachi Zosen INOVA

SIEMENS energy

Carbon capture technologies to support all industries based on Hot Potassium Carbonate (HPC)

CapsolGo®
demonstration units

700 tonnes CO_2/year

Mobile carbon capture demonstration unit with an all-inclusive package. Two units currently in operation in Germany.

CapsolEoP ®
(End-of-Pipe)

100 000+ tonnes CO_2/year

A full capture system for large-scale CO_2 emitting industries. First large-scale license agreement for BECCS (bio-energy carbon capture and storage) project in Sweden.

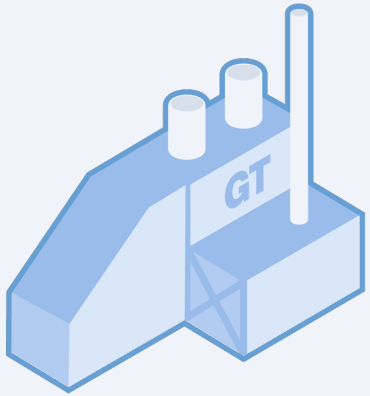

CapsolGT®
for gas turbines

12 000 to 400 000+ tonnes CO_2/year

A carbon capture solution for simple-cycle gas turbines, enabling additional electricity generation. Applicable also when turbines are used for other industrial applications.

capsol
technologies

Proven traction in BECCS

Stockholm Exergi, Sweden

800 000

tonnes of CO_2 per year
(full-scale deployment)

Capsol awarded technology licensing agreement for CapsolEoP®

Biomass plant, Sweden

~170 000

tonnes of CO_2 per year
(full-scale deployment)

Capsol awarded Front End Engineering Design (FEED) study with Norconsult

United States

~100 000

tonnes of CO_2 per year
(full-scale deployment)

Capsol executed feasibility study in 2022/2023 and awarded pre-FEED study in 2023

Germany

~200 000

tonnes of CO_2 per year
(full-scale deployment)

Capsol awarded CapsolGo® demonstration campaign

Proven traction in Waste-to-Energy

New projects, solid execution and key partners

KVA Linth, Switzerland

~100 000
tonnes of CO_2 per year (full-scale deployment)

Awarded feasibility study for the CapsolEoP® carbon capture technology

Öresundskraft AB, Sweden

~200 000
tonnes of CO_2 per year (full-scale deployment)

CapsolGo® carbon capture demonstration campaign at Helsingborg completed

Central Europe

~200 000
tonnes of CO_2 per year (full-scale deployment)

Feasibility study for the CapsolEoP® carbon capture technology

Westenergy, Finland

~200 000
tonnes of CO_2 per year (full-scale deployment)

Technology selected. Cooperation with Sumitomo

Germany

~200 000
tonnes of CO_2 per year (full-scale deployment)

CapsolGo® campaign in Germany.

EEW, Germany

~280 000
tonnes of CO_2 per year (full-scale deployment)

CapsolGo® campaign for EEW in Hannover.

Gaining traction with the largest cement producers globally

United Kingdom

~700 000

tonnes of CO_2 per year (full-scale deployment)

Short-listed as technology for feasibility study. Expected start Q3 2023.

Location undisclosed

~1 000 000

tonnes of CO_2 per year (full-scale deployment)

Capsol to provide feasibility engineering. Execution ongoing.

Europe

1 000 000+

tonnes of CO_2 per year (full-scale deployment)

Feasibility study awarded in July 2023. Execution ongoing.

Europe

1 300 000+

tonnes of CO_2 per year (full-scale deployment)

Feasibility study awarded September 2023. Execution ongoing.

capsol technologies

A creative and counterintuitive technology solution

HPC for post combustion CO_2 capture

"The compression problem"

- Problem statement:
  - Traditional HPC CO_2 capture does not work under ambient pressure conditions. Driving forces are too low. You need to compress flue gas to increase CO_2 partial pressure.
  - Flue gas compression requires large machines that use large amount of energy.
- Resulting in:
  - Traditional HPC CO_2 capture for ambient pressured flue gases is considered too expensive and energy intensive
- **Conventional solutions:**
  - **Add more promoters**
  - **Find new and more effective promoters that will make HPC work at ambient pressure**
  - **Choose a different solvent.**

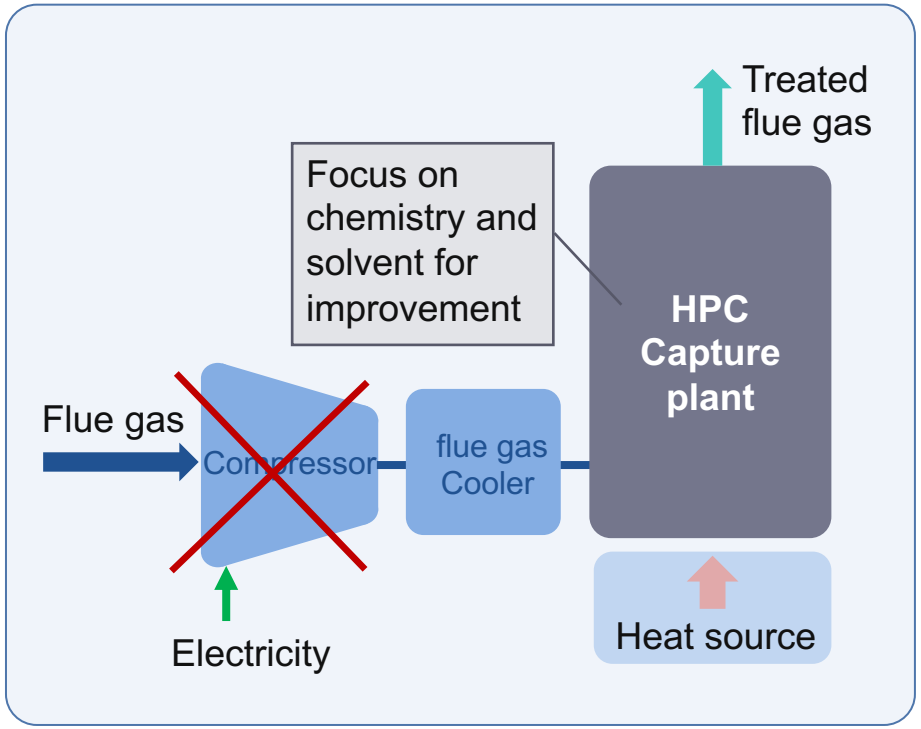

The conventional solutions see the flue gas compression as a problem and will try to avoid it.

capsol technologies

HPC for post combustion CO_2 capture

The creative and “counterintuitive” solution

- The counterintuitive solution is to look at the compression as an advantage for the capture process - not a disadvantage. - *It is not a problem, it is the solution*
- Adding an expander + tailoring the process to the conditions of the HPC absorption section creates a flexible combined heat engine / heat pump and a chemical absorption plant in one installation.

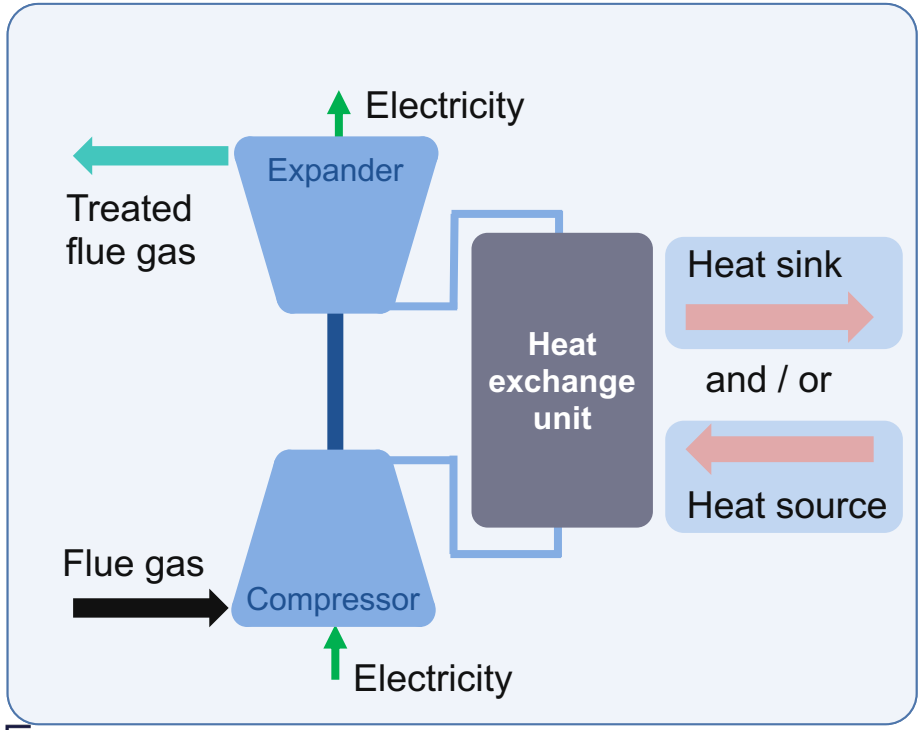

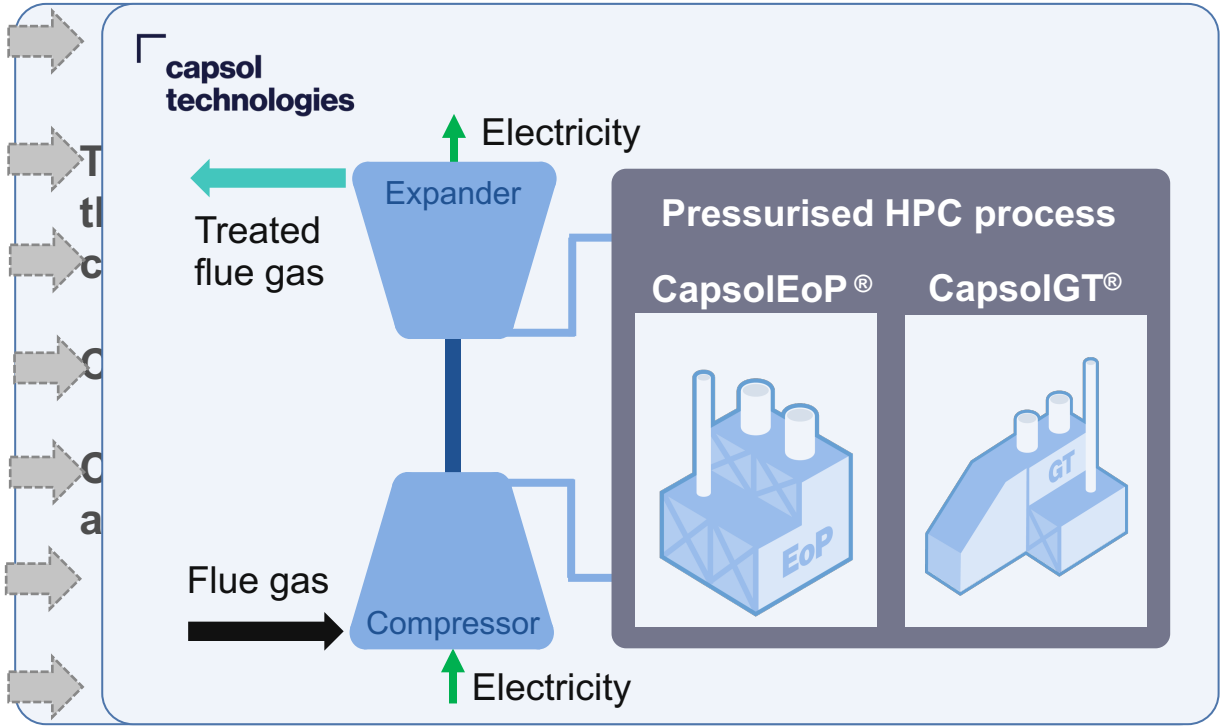

capsol technologies

capsol
technologies

CapsolEoP®

Efficient heat pumping and CO_2 capture. Using electricity to efficiently generate heat for internal HPC CO_2 capture process. Can be configured to deliver additional heat to ex. district heating.

CapsolEoP® - End of Pipe CO_2 Capture plant

- Capsol EoP® is not just a chemical absorption plant with a different solvent
- The CapsolEoP® is a **chemical absorption plant with an integrated heat pump** where the HPC absorption process acts as a heat sink as well as a possible heat source.

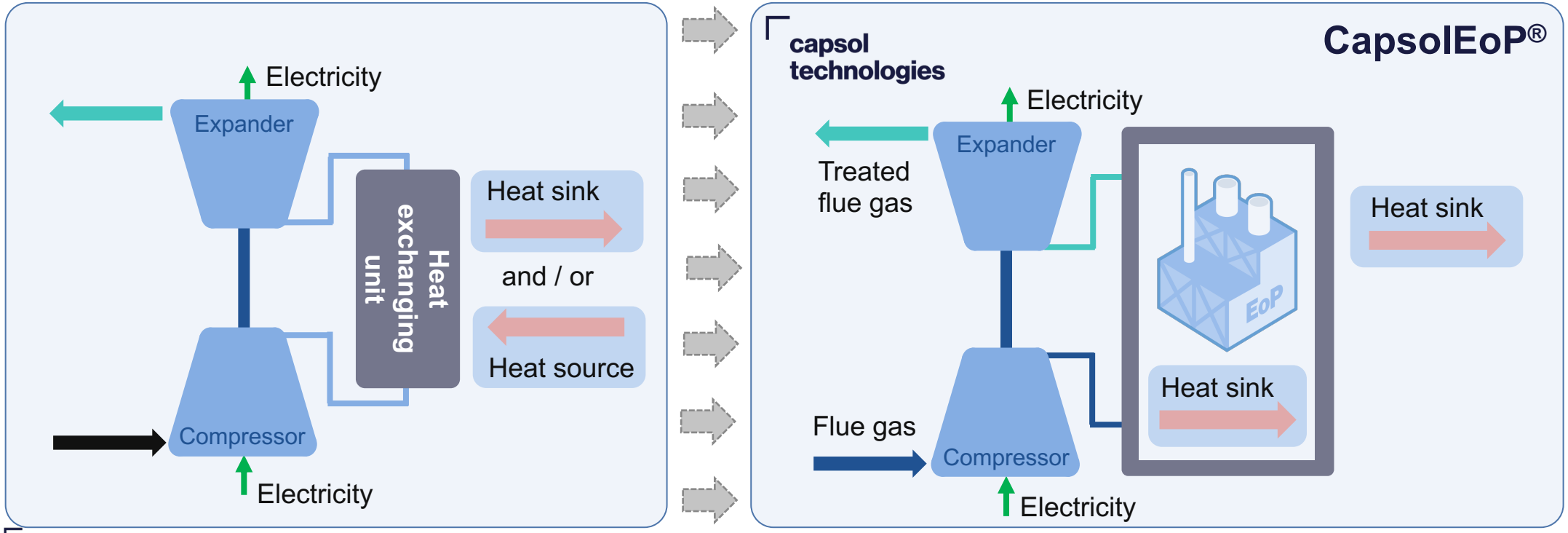

capsol technologies

CapsolEoP® - Efficient heat pump and CO_2 capture plant

-Delivering heat to district heating

- CapsolEoP® optimised for delivering maximum district heating is both a CO_2 capture plant and a very effective heat pump

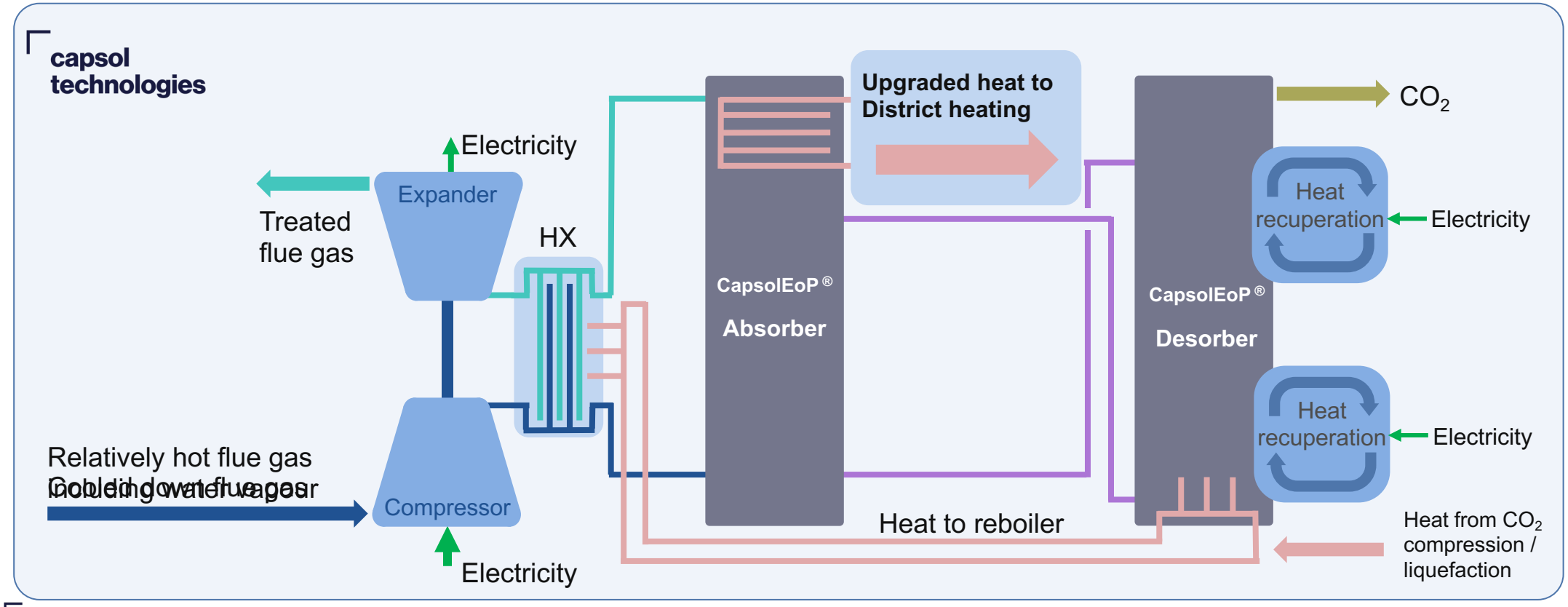

capsol technologies

CapsolEoP®

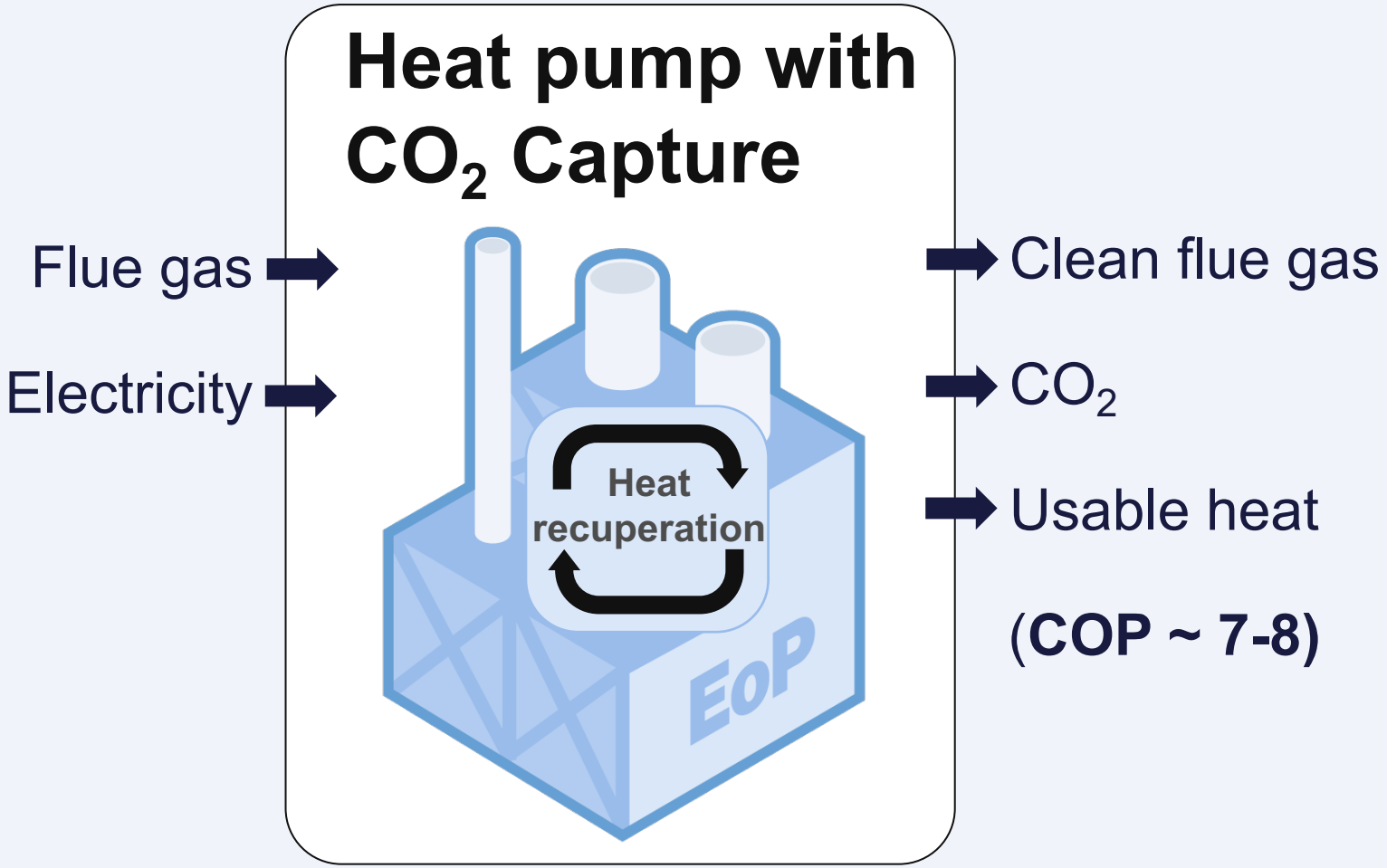

Efficient heat pumping and CO_2 capture. Using electricity to efficiently generate heat for internal HPC CO_2 capture process. Can be configured to deliver additional heat to ex. district heating.

capsol
technologies

CapsolGT®

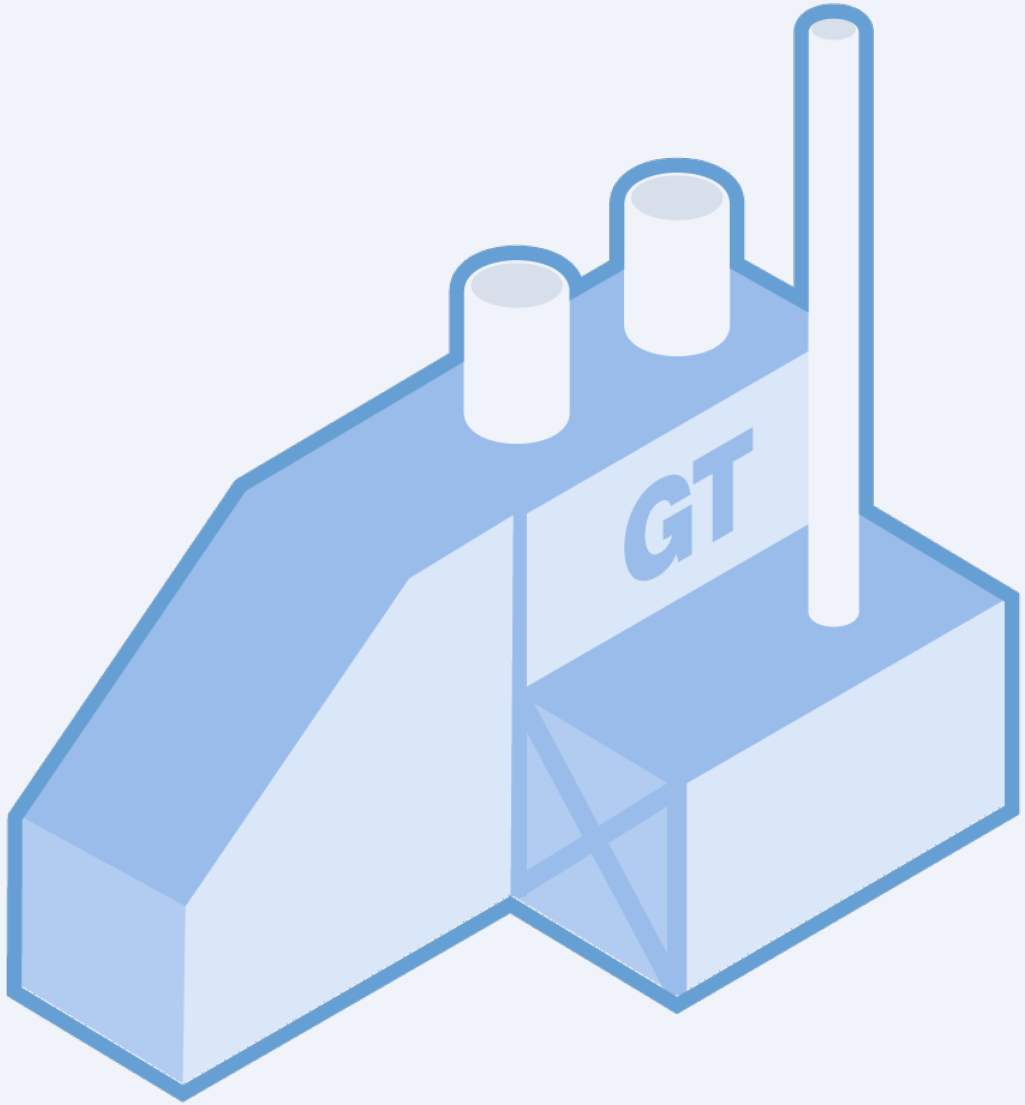

A thermodynamic power cycle removing 95% of the CO_2 from the flue gas stream from single cycle gas turbines, producing clean electricity and CO_2

CapsolGT® - Power cycle with CO_2 capture

- CapsolGT® is not just an absorption CO_2 capture plant with a different solvent
- The CapsolGT® is an absorption **CO_2 capture plant with an integrated power cycle.**

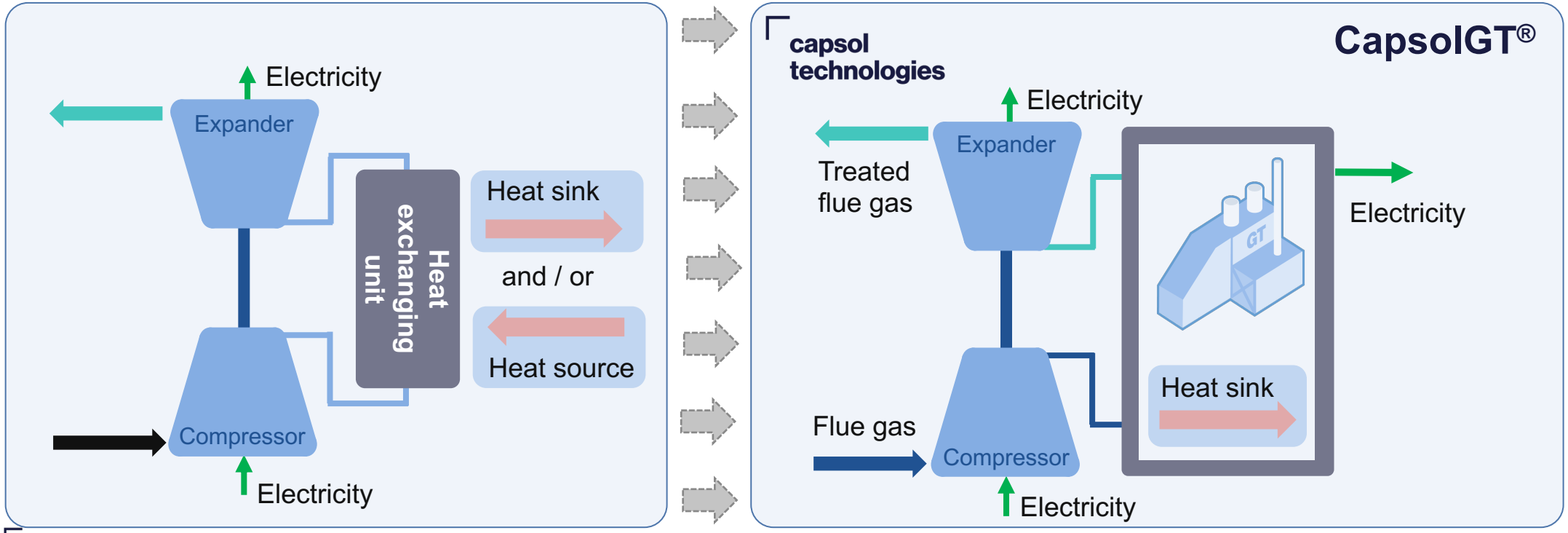

capsol technologies

Removing CO_2 emissions from simple cycle gas turbines

- First conventional step is to add a steam bottoming cycle to increase efficiency then add a CO_2 capture plant

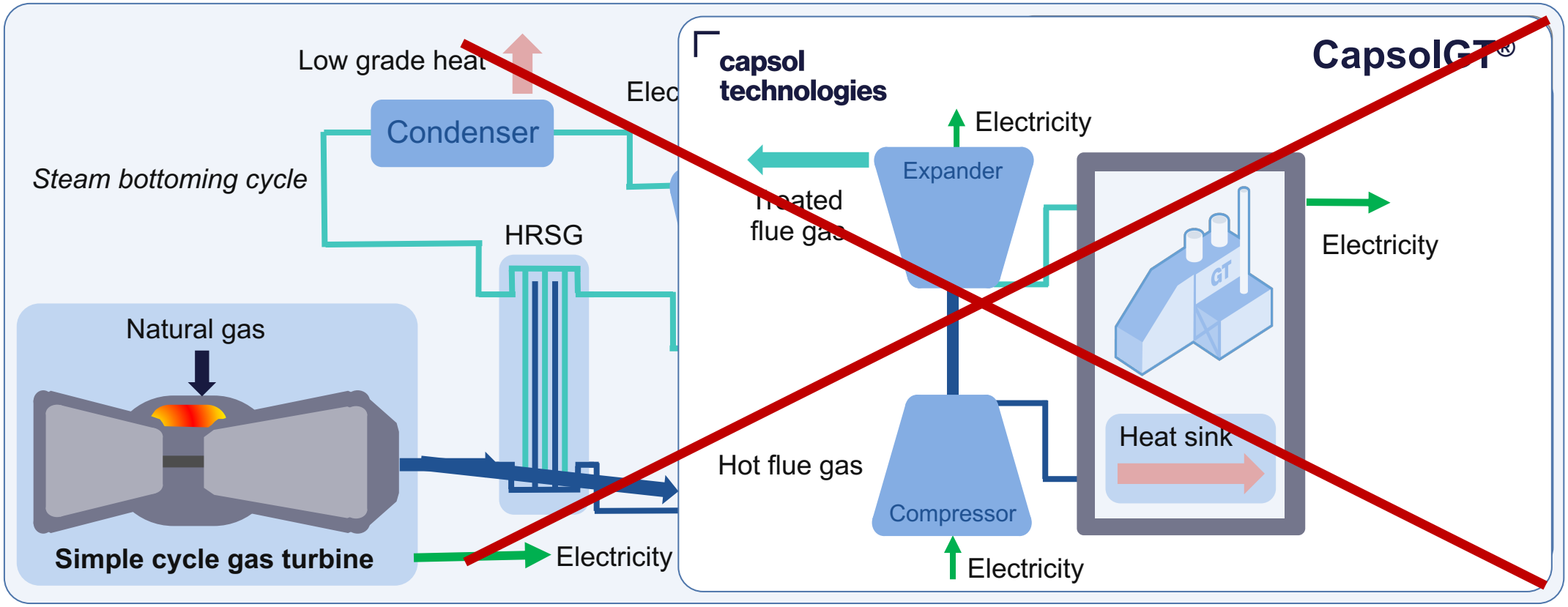

capsol technologies

CapsolGT® - Bottoming cycle and CO_2 capture plant *-Delivering more low carbon power*

- CapsolGT® - a **power cycle with integrated 95% CO_2 capture** delivering additional low carbon power from simple cycle gas turbines

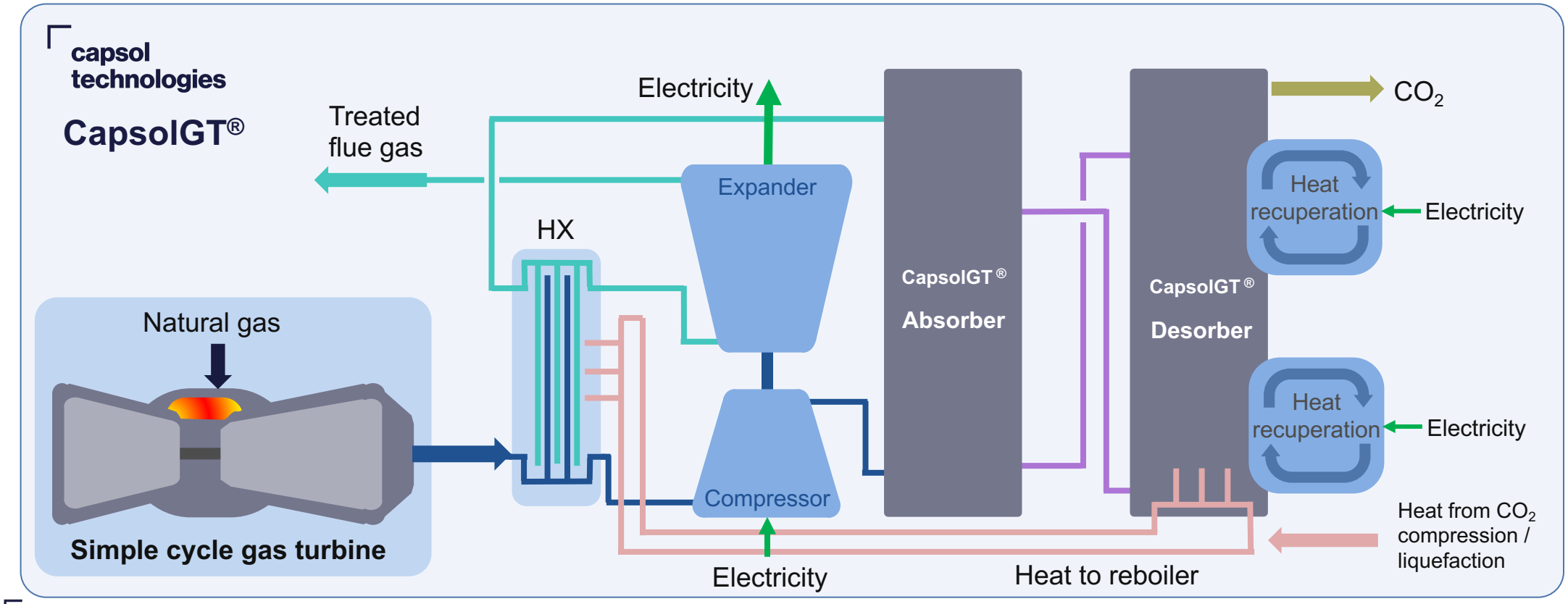

capsol technologies

CapsolGT®

Hot flue gas

Power cycle with CO_2 Capture

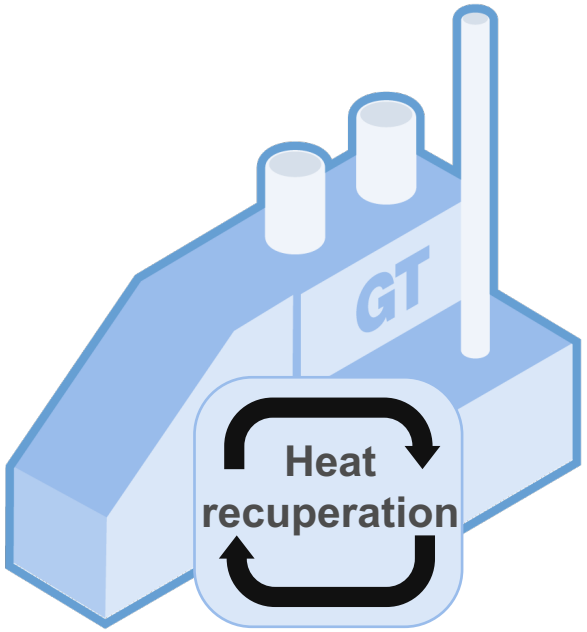

Clean flue gas

CO_2

Power/ Electricity

A thermodynamic power cycle removing 95% of the CO_2 from the flue gas stream from single cycle gas turbines, producing clean electricity and CO_2

More than 50% electric efficiency with 95% CO_2 capture

capsol technologies

Capsol Technologies

HPC - Technology

Capsol Technologies' Potassium Carbonate based CO_2 capture is not just another solvent based absorption process.

The technology is a flexible thermodynamic cycle with integrated CO_2 capture.

-Suitable for wide range of industrial flue gases

capsol
technologies

Thank you